CENTAFLEX-A®

ENGLISH

CF-A-17-15

Is this PDF up to date?
click here for an update check!

CENTAFLEX-A

VERSATILE SUPERSTAR. FOR ALL APPLICATIONS.

SYSTEM

At a glance
Page 03

COMPONENTS/ADAPTATION

Rubber elements
Page 06

Hubs
Page 07

Flanges
Page 07

Drive shafts
Page 07

Torque limiters
Page 07

AREAS OF APPLICATION

Product selection:
Which coupling for which purpose?
Page 10

TECHNICAL DATA

Product application:
Which feature for which coupling?
Page 13

SERVICE

Explanation of the technical data
Page APP-1

Contact
Page APP-6

Is this PDF up to date?
click here for an update check!

CENTAFLEX-A
AT A GLANCE

The CENTAFLEX-A presents itself as a versatile superstar when it comes to coping with sophisticated misalignment compensation, fail-safe decoupling of torsional vibrations and reliable electric insulation. Complete with maximum design flexibility.

As the bestseller among all of CENTA's couplings, it is based on a highly elastic rubber element with an integrated fail-safe device that allows for adequate and appropriate application designs. The element is available in a variety of materials and different degrees of Shore hardness. This enables the torsional flexibility of the couplings to be adapted with utmost variability to the specific application. It features a radial-axial screwing concept, unique in this market, and simplifies the mounting of these couplings significantly.

The CENTAFLEX-A is available in a number of different designs as a coupling or a drive shaft (steel, carbon-fibre or glass-fibre designs) as well as in axially plug-in design. Quick replacement of the low-maintenance rubber element is made possible by a split-design replacement element for radial mounting. Combined with a wide range of adapters, flanges, and hubs, the CENTAFLEX-A adapts optimally to each installation thereby guaranteeing seamless coverage for torques up to 12.5 kNm.

Features

High flexibility in all directions

High adaptability to torsional flexibility

High design flexibility

Fail-safe device integration

Areas of application

torque range	0.01 to 12.5 kNm
elastic material	NR
	Si
temperature range	NR –45° to +80°C
	Si –45° to +120°C

LEADING BY INNOVATION

TORSIONAL FLEXIBILITY

The rubber elements for the CENTAFLEX-A are available in different degrees of Shore hardness. This enables the torsional flexibility of the couplings to be adapted with utmost variability to the specific application. Torsional vibrations and impacts are reliably dampened.

COMPENSATION OF MISALIGNMENTS

The couplings of the CENTAFLEX-A series compensate for significant misalignments in axial, radial and angular directions. They are the ideal solution for applications with demanding misalignments.

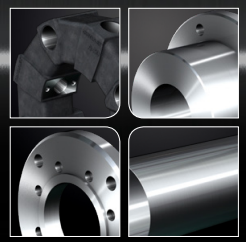

MODULARITY

The rubber element of the CENTAFLEX-A enables an adequate and appropriate design solution for practically any application with very little effort. The versatile superstar among the CENTA products is available as a coupling and as a drive shaft (steel, carbon fibre or glass-fibre design).
Combined with a wide range of adapters, flanges and hubs, the CENTAFLEX-A can be customized to any kind of mounting and application condition.

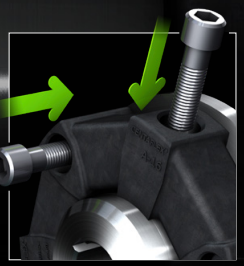

ASSEMBLY

The axial-radial screwing connection for the CENTAFLEX-A, unique in this market, eases the assembly significantly; moreover, it ensures the application of pre-pressure on the rubber columns and is advantageous for the performance capabilities and service-life of the coupling. In addition, all designs are available as plug-in versions for axial assembly. Quick replacement of the low-maintenance rubber element is guaranteed due to a split version of the rubber element, which is assembled radially.

QUALITY

When the going gets tough, quality is priceless. With an exemplary Quality Management, CENTA ensures products that withstand the roughest assignments. CENTA's coupling systems are more than the sum of their parts. CENTA entertains the vision of intelligent products that meet the highest requirements in terms of design and quality.

CENTAFLEX-A

COMPONENTS ADAPTATION

CENTAFLEX-A
COMPONENTS

RUBBER ELEMENTS

The CENTAFLEX-A rubber elements are made of high-quality natural rubber or of silicone – for use at very high ambient temperatures – and feature vulcanized jaws for fastening to the drive side resp. power take-off side. By covering the jaws in the circumferential direction, the coupling elements are fail-safe.

The axial-radial screwing connection for the CENTAFLEX-A, unique in this market, eases the assembly significantly; moreover, it ensures the application of pre-pressure on the rubber columns and is advantageous for the performance capabilities and service-life of the coupling.

The CENTAFLEX-A rubber elements are available in various designs either as a screw-type or as an axially plug-in version. To allow quick replacement of the low-maintenance rubber element, we offer a split version of the rubber element, which is assembled radially.

CENTAFLEX-A
ADAPTATION

HUBS

We offer all standard connections, such as evolute splines, flange connections, clamping sets, keyway connections and oil press fits. In addition, CENTA has developed the CENTALOC clamping hub, a shaft-hub-connection, which is completely free of backlash and has proven itself in thousands of applications. The clamping system prevents wear and tear due to fretting corrosion or deflection of the gearing and is available for all CENTAFLEX-A couplings.

FLANGES

The CENTAFLEX-A is available for all SAE flywheels as well as for non-standard flywheels. Flanges can be obtained for all connections and can be adapted to any existing drive or PTO elements as desired.

TUBES

The homokinetic version of the CENTAFLEX-A can be delivered in any requested length and thereby adapted to specific mounting conditions. Short shafts are made with tubes of round steel, longer shafts (up to 6 metres and special designs of even greater length) are bridged by a thin-walled precision steel tube.

In addition, CENTA has developed light-weight drive shafts made of carbon-fibre reinforced plastic. The rigidity and stability is comparable to steel, but the weight is significantly less, which is an advantage especially for bend-critical applications. For applications which require extremely high insulation values, the CENTAFLEX-A can be delivered with a glass-fibre tube.

TORQUE LIMITERS

Load holding torque limiters are available for all CENTAFLEX-A designs, suitable for mounting either in the middle tube as well as on the generator shaft. Supplied with pre-set slip-through torque and individual calibration protocol.

CENTAFLEX-A

TYPES

Which product for your purpose?
We will gladly assist → www.centa.info/contact

CENTAFLEX-A
TYPES

Coupling
Type 0 and 0–S

Rubber element on which the Type series is based. Made of high-quality natural rubber or silicone and available in various degrees of Shore hardness.

Type S for plug-in assembly.

Coupling
Type 1 and 1–S

Rubber element with hub for drive resp. power take-off side. For connection to already existing drivetrain elements such as flywheels, pulleys or brake discs, friction or turbo clutches, freewheel clutches, cogwheels, etc.

Type S for plug-in assembly.

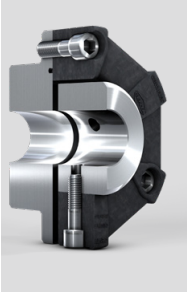

Coupling
Type 2 and 2–S

Rubber element with hub for drive resp. power take-off side. Intended for all applications in general mechanical engineering.

Type S for plug-in assembly.

Coupling
Type 3 and 3–S

Rubber element with simple flange plate, which can be adopted to any standard and non-standard flywheel as well as any other element. Suitable for combustion engines and other applications.

Type S for plug-in assembly.

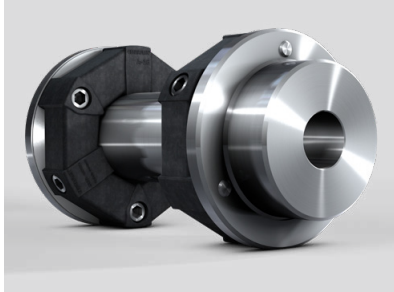

Drive shaft
Type G / GB / GZ

Highly flexible drive shaft, available in any desired length and with variable connection elements that can be customized to any kind of mounting and application condition. Extremely versatile and cost-effective type. Suitable for low torques and small distances.

For applications with high torques and large distances, the shafts feature additionally an accurate, low maintenance centering of the intermediate tube. CENTA always considers the individual operating conditions before choosing a type.

CENTAFLEX-A

APPLICATIONS

Which product for your purpose?
We will gladly assist → www.centa.info/contact

CENTAFLEX-A
APPLICATIONS

RAIL APPLICATIONS

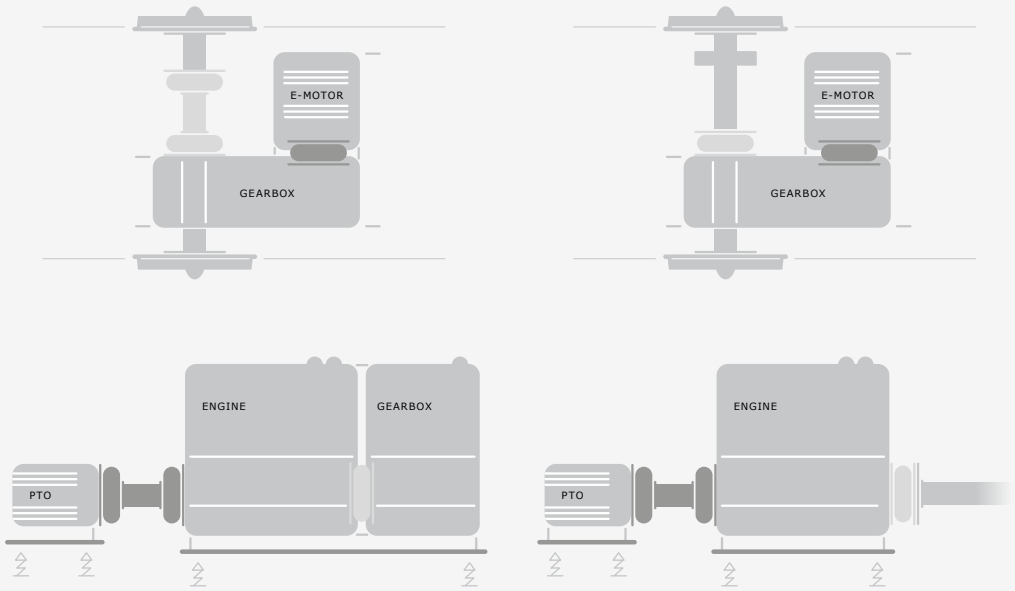

INDUSTRY APPLICATIONS

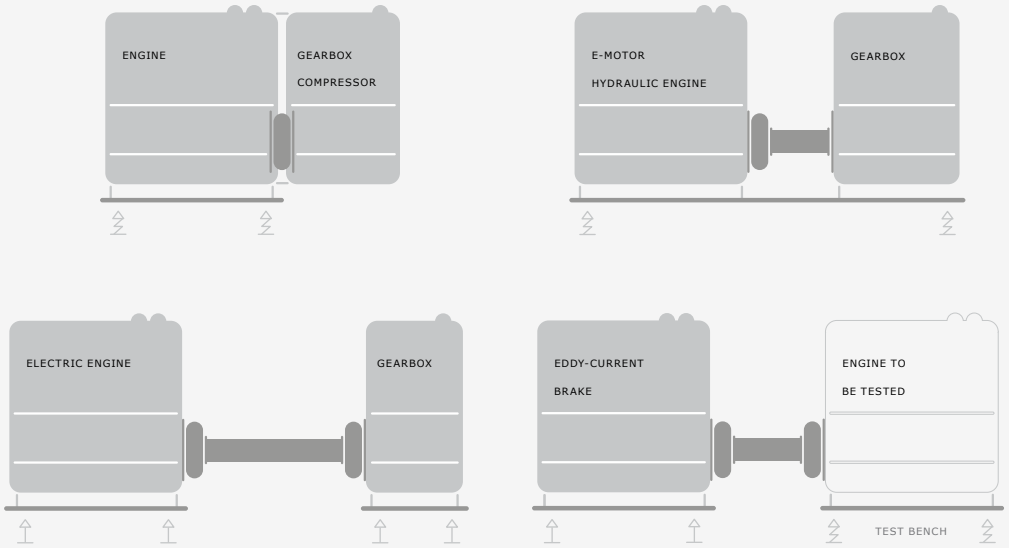

Which product for your purpose?
We will gladly assist → www.centa.info/contact

CENTAFLEX-A
APPLICATIONS

MARINE APPLICATIONS

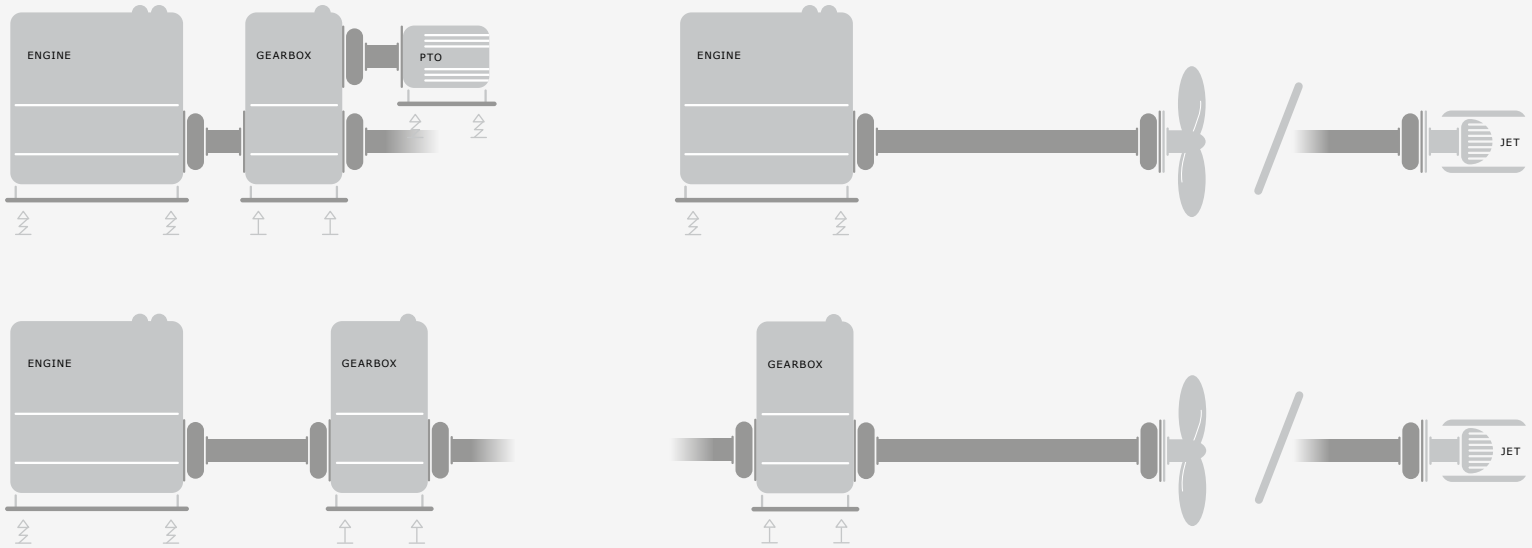

WIND APPLICATION

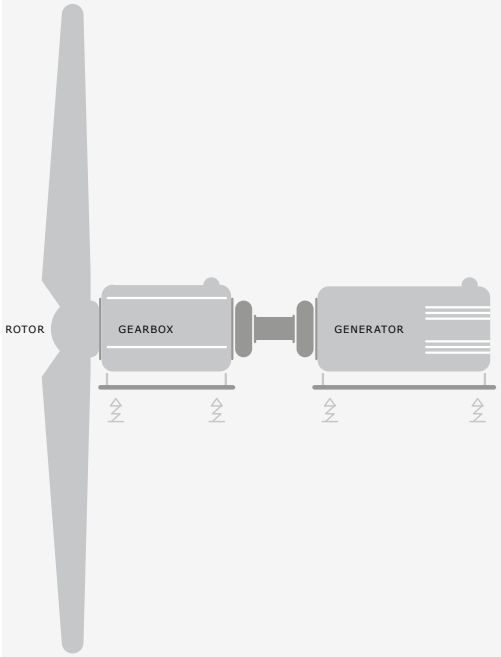

Which product for your purpose?
We will gladly assist → www.centa.info/contact

CENTAFLEX-A

TECHNICAL DATA

Questions on product selection?
We will gladly assist → www.centa.info/contact

CENTAFLEX-A SERIES 0 – 3

TECHNICAL DATA

Sizes 1–28 ..... Page 15

Sizes 30–800 ..... Page 16

DIMENSIONS

Type 0	Sizes 1–800	Page 17
Type 0–S	Sizes 1-600	Page 18
Type 1	Sizes 1–800	Page 19
Type 1–S	Sizes 1-600	Page 20
Type 2	Sizes 1–800	Page 21
Type 2–S	Sizes 1-600	Page 22
Type 3	Sizes 8–90	Page 23
	Sizes 140–800	Page 24
Type 3-S	Sizes 8-90	Page 25
	Sizes 140–600	Page 26

CENTAFLEX-A

TECHNICAL DATA | **↓ SIZES 1–28** | → SIZES 30–800

1	2*	3	4	5	6	7	8	9**	10	11	12	13	14	15
Size	Rubber quality [Shore A]	Nominal torque T_{KN} [kNm]	Maximum torque T_{Kmax} [kNm]	Continuous vibratory torque T_{KW} [kNm]	Permissible power loss P_{KV} [W]	Dynamic torsional stiffness C_{Tdyn} [kNm/rad]	Relative damping Ψ	Speed n_{max} [min^{-1}]	Permissible axial displacement ΔK_a [mm]	Axial stiffness C_a [kN/mm]	Permissible radial displacement ΔK_r [mm]	Radial stiffness C_r [kN/mm]	Permissible angular displacement ΔK_w [°]	Angular stiffness C_w [kNm/°]
1	50	0,010	0,025	0,005	6	0,09	0,60	10000	2	0,0266	1,5	0,105	3	0,00021
	60					0,14	0,78			0,0380		0,150		0,00030
2	50	0,020	0,060	0,010	10	0,18	0,60	8000	3	0,0154	1,5	0,105	3	0,00021
	60					0,29	0,78			0,0220		0,150		0,00030
4	50	0,050	0,125	0,020	15	0,55	0,60	7000	3	0,0525	1,5	0,350	3	0,00168
	60					0,85	0,78			0,0750		0,500		0,00240
8	50	0,100	0,280	0,040	25	0,90	0,80	6500	4	0,0525	2	0,350	3	0,00252
	60					1,50	1,00			0,0750		0,500		0,00360
12	50	0,140	0,360	0,050	30	2,70	0,80	6500	4	0,1750	2	0,700	2	0,00630
	60					4,40	1,00			0,2500		1,000		0,00900
16	50	0,200	0,560	0,080	40	2,00	0,80	6000	5	0,1550	2	0,300	3	0,01750
	60					3,40	1,00			0,3200		0,600		0,01900
22	50	0,275	0,750	0,100	50	6,10	0,80	6000	5	0,3100	2	0,850	2	0,02100
	60					9,00	1,00			0,5000		1,500		0,02400
25	50	0,315	0,875	0,125	68	2,80	0,80	5000	5	0,2100	2	0,400	3	0,01900
	60					4,50	1,00			0,3950		0,800		0,02100
28	50	0,420	1,200	0,150	75	7,50	0,80	5000	5	0,4000	2	1,000	2	0,02400
	60					12,00	1,00			0,7000		1,800		0,02800

* values for 70 and 75 Shore on request
** At 60 Shore.

CENTAFLEX-A

TECHNICAL DATA | **↓ SIZES 30–800** | ← SIZES 1–28

1	2*	3	4	5	6	7	8	9**	10	11	12	13	14	15
Size	Rubber quality [Shore A]	Nominal torque T_{KN} [kNm]	Maximum torque T_{Kmax} [kNm]	Continuous vibratory torque T_{KW} [kNm]	Permissible power loss P_{KV} [W]	Dynamic torsional stiffness C_{Tdyn} [kNm/rad]	Relative damping Ψ	Speed n_{max} [min^{-1}]	Permissible axial displacement ΔK_a [mm]	Axial stiffness C_a [kN/mm]	Permissible radial displacement ΔK_r [mm]	Radial stiffness C_r [kN/mm]	Permissible angular displacement ΔK_w [°]	Angular stiffness C_w [kNm/°]
30	50	0,500	1,400	0,200	80	4,80	0,80	4000	5	0,2250	2	0,500	3	0,01800
	60					7,80	1,00			0,4600		1,000		0,02500
50	50	0,700	2,100	0,300	90	12,00	0,80	4000	5	0,4750	2	1,450	2	0,03000
	60					19,00	1,00			0,8500		2,350		0,04000
80	50	0,900	2,100	0,320	100	16,00	0,80	4000	3	0,4500	1,5	1,600	2	0,03800
	60					25,00	1,00			0,7500		2,400		0,05000
90	50	1,100	3,150	0,450	120	10,50	0,80	3600	5	0,3150	2	0,800	3	0,02800
	60					16,00	1,00			0,6500		1,500		0,03500
140	50	1,700	4,900	0,700	150	26,50	0,80	3600	5	0,5800	2	1,500	2	0,04200
	60					40,00	1,00			1,0000		2,500		0,06700
200	50	2,400	6,000	0,960	170	38,70	1,05	3000	5	0,6400	2	1,500	2	0,06200
	60					60,00	1,10			1,1000		2,650		0,06800
250	50	3,000	8,750	1,250	200	43,00	0,80	3000	5	0,6600	2	1,700	2	0,07100
	60					77,00	1,00			1,2000		2,700		0,10500
400	50	5,000	12,500	2,000	240	75,00	1,05	2500	5	0,7000	2	1,900	2	0,09500
	60					120,00	1,10			1,3500		3,000		0,13500
600	50	8,000	20,000	3,200	330	105,00	1,05	2500	5	0,8500	2	2,500	2	0,13000
	60					160,00	1,10			1,5500		3,700		0,20000
800	50	12,500	30,000	5,000	420	160,00	1,05	2300	5	1,1000	2	3,300	2	0,43000
	60					243,00	1,10			2,0000		5,000		0,56000

* values for 70 and 75 Shore on request
** At 60 Shore.

CENTAFLEX-A

TYPE 0

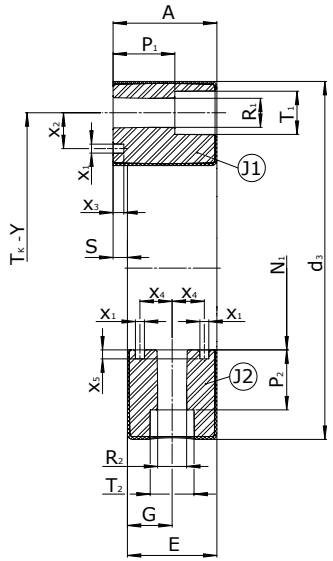

DIMENSIONS ↓ **SIZES 1–800**

Size	Dimensions																			Mass moments of inertia and masses			
	A	d_3	E	G	N_1	P_1	P_2	R_1	R_2	S	T_1	T_2	x_1	x_2	x_3	x_4	x_5	T_K	Y	J_1	J_2	m_1	m_2
																				[kgm²]		[kg]	
1	24	56	22	11	30	18	5	6,2	6,2	2	10,5	10,5	-	-	-	-	-	44	2x180°	0,00002	0,00002	0,04	0,05
2	24	85	20	10	40	12	14,2	8,2	8,2	4	13,5	13,5	4	9	3	-	3	68	2x180°	0,00009	0,00012	0,08	0,11
4	28	100	24	12	45	17	18,5	8,2	8,2	4	13,5	13,5	4	9	3	-	3	80	3x120°	0,00020	0,00020	0,13	0,15
8	32	120	28	14	60	20,5	20,5	10,2	10,2	4	16,5	16,5	4	12	4	10	3	100	3x120°	0,0006	0,0005	0,25	0,25
12	32	122	28	14	60	20,5	20,5	10,2	10,2	4	16,5	16,5	4	12	4	10	3	100	4x90°	0,0007	0,0005	0,28	0,32
16	42	150	36	18	70	23,5	25,2	12,2	12,2	6	18,1	18,3	5	18	6	13,5	5	125	3x120°	0,0015	0,0014	0,4	0,5
22	42	150	36	18	70	23,5	25,2	12,2	12,2	6	18,1	18,3	5	18	6	13,5	5	125	4x90°	0,0019	0,0016	0,5	0,6
25	46	170	40	20	85	26	26	14,2	14,2	6	21,1	22	5	18	5	14	5	140	3x120°	0,0027	0,0025	0,6	0,6
28	46	170	40	20	85	26	26	14,2	14,2	6	21,1	22	5	18	5	14	5	140	4x90°	0,0034	0,0030	0,7	0,8
30	58	200	50	25	100	34,5	33,5	16,2	16,2	8	24,1	24,5	5	20	6	18	5	165	3x120°	0,0065	0,0060	1,0	1,1
50	58	200	50	25	100	34,5	33,5	16,2	16,2	8	24,1	24,5	5	20	6	18	5	165	4x90°	0,0081	0,0072	1,3	1,2
80	65	205	61	30,5	100	34,5	34,5	16,5	16,5	4	24,1	24,5	5	20	6	18	5	165	4x90°	0,0095	0,0092	1,4	1,6
90	70	260	62	31	125	45	46	20,2	20,2	8	30,5	31	8	25	5	22,5	5	215	3x120°	0,0237	0,0213	2,2	2,3
140	70	260	62	31	125	45	46	20,2	20,2	8	30,5	31	8	25	5	22,5	5	215	4x90°	0,0286	0,0251	2,7	2,6
200	80	300	72	36	145	44	45,5	20,2	20,2	8	32	32	8	25	5	22,5	5	250	4x90°	0,0481	0,0471	3,4	3,7
250	85	340	77	22,5 54,5	160	60	60	20,2	20,2	8	30,5	*	10	30	8	-	8	280	4x90°	0,081	0,086	4,5	5,5
400	105	370	95	28,5 66,5	170	67	71	24,2	20,2	10	42,5	*	10	40	8	-	8	300	4x90°	0,155	0,154	7,5	8,2
600	125	470	110	33 77	200	84	87	27,2	24,2	15	50	*	10	60	9	-	9	380	4x90°	0,464	0,363	13,8	13,3
800	145	545	128	29 64 99	230	112	103	22,2	22,2	17	45	*	10	45	9	-	9	370 470	4x90° 4x90°	0,586	0,637	20,1	24,1

* on request

CENTAFLEX-A

TYPE 0–S

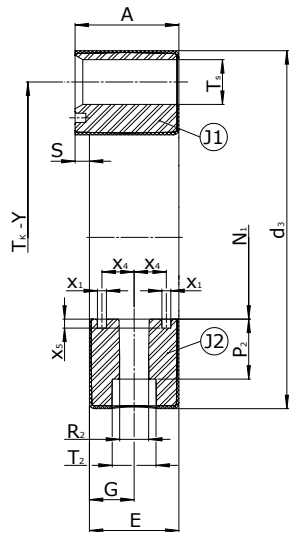

DIMENSIONS | **↓ SIZES 1–600**

Size	Dimensions															Mass moments of inertia and masses			
	A	d_3	E	G	N_1	P_2	R_2	S	T_2	T_s	x_1	x_4	x_5	T_K	Y	J_1	J_2	m_1	m_2
																[kgm²]		[kg]	
1	24	56	22	11	30	5	6,2	2	10,5	10	-	-	-	44	2x180°	0,00004	0,00002	0,06	0,05
2	24	85	20	10	40	14,2	8,2	4	13,5	14	4	-	3	68	2x180°	0,00011	0,00012	0,1	0,11
4	28	100	24	12	45	18,5	8,2	4	13,5	14	4	-	3	80	3x120°	0,00023	0,00020	0,15	0,15
8	32	120	28	14	60	20,5	10,2	4	16,5	17,1	4	10	3	100	3x120°	0,0007	0,0005	0,29	0,25
12	32	122	28	14	60	20,5	10,2	4	16,5	17,1	4	10	3	100	4x90°	0,0010	0,0005	0,32	0,32
16	42	150	36	18	70	25,2	12,2	6	18,3	19,1	5	13,5	5	125	3x120°	0,0019	0,0014	0,5	0,5
22	42	150	36	18	70	25,2	12,2	6	18,3	19,1	5	13,5	5	125	4x90°	0,0026	0,0016	0,6	0,6
25	46	170	40	20	85	26	14,2	6	22	22	5	14	5	140	3x120°	0,0036	0,0025	0,8	0,6
28	46	170	40	20	85	26	14,2	6	22	22,5	5	14	5	140	4x90°	0,0046	0,0030	0,9	0,8
30	58	200	50	25	100	33,5	16,2	8	24,5	25	5	18	5	165	3x120°	0,0083	0,0060	1,3	1,1
50	58	200	50	25	100	33,5	16,2	8	24,5	25,1	5	18	5	165	4x90°	0,0106	0,0072	1,7	1,2
80	65	205	61	30,5	100	34,5	16,5	4	24,5	25,1	5	18	5	165	4x90°	0,0119	0,0092	1,7	1,6
90	70	260	62	31	125	46	20,2	8	31	32	8	22,5	5	215	3x120°	0,0294	0,0213	2,7	2,3
140	70	260	62	31	125	46	20,2	8	31	32,1	8	22,5	5	215	4x90°	0,0368	0,0251	3,4	2,6
200	80	300	72	36	145	45,5	20,2	8	32	32,1	8	22,5	5	250	4x90°	0,0596	0,0471	4,2	3,7
250	85	340	77	22,5 54,5	160	60	20,2	8	*	32,1	10	-	8	280	4x90°	0,091	0,086	5	5,5
400	105	370	95	28,5 66,5	170	71	20,2	10	*	45	10	-	8	300	4x90°	0,204	0,154	9,6	8,2
600	125	470	110	33 77	200	87	24,2	15	*	53	10	-	9	380	4x90°	0,569	0,363	16,5	13,3

* on request

CENTAFLEX-A

TYPE 1

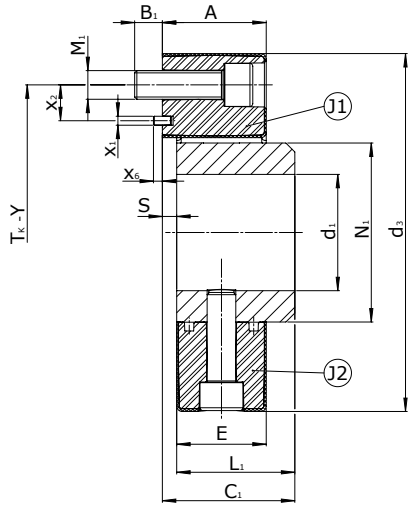

DIMENSIONS ↓ **SIZES 1–800**

Size	Dimensions															Mass moments of inertia and masses			
	A	B_1	C_1	d_{1max}	d_3	E	L_1	M_1	N_1	S	x_1	x_2	x_6	T_K	Y	J_1	J_2	m_1	m_2
																[kgm²]		[kg]	
1	24	7	26	19	56	22	24	M 6	30	2	-	-	-	44	2x180°	0,00002	0,00003	0,04	0,13
2	24	8	32	26	85	20	28	M 8	40	4	-	-	-	68	2x180°	0,00009	0,00016	0,08	0,26
4	28	8	34	30	100	24	30	M 8	45	4	-	-	-	80	3x120°	0,00020	0,00027	0,13	0,35
8	32	10	46	38	120	28	42	M 10	60	4	-	-	-	100	3x120°	0,0006	0,0008	0,25	0,79
12	32	10	46	38	122	28	42	M 10	60	4	-	-	-	100	4x90°	0,0007	0,0008	0,28	0,85
16	42	12	56	48	150	36	50	M 12	70	6	5	18	4	125	3x120°	0,0015	0,0021	0,40	1,26
22	42	12	56	48	150	36	50	M 12	70	6	5	18	4	125	4x90°	0,0019	0,0023	0,50	1,35
25	46	14	61	55	170	40	55	M 14	85	6	5	18	5	140	3x120°	0,0027	0,0042	0,60	1,96
28	46	14	61	55	170	40	55	M 14	85	6	5	18	5	140	4x90°	0,0034	0,0047	0,70	2,10
30	58	16	74	65	200	50	66	M 16	100	8	5	20	5	165	3x120°	0,0065	0,0100	1,0	3,4
50	58	16	74	65	200	50	66	M 16	100	8	5	20	5	165	4x90°	0,0081	0,0112	1,3	3,4
80	65	16	75,5	65	205	61	66	M 16	100	9,5	5	20	5	165	4x90°	0,0095	0,0132	1,4	3,8
90	70	20	88	85	260	62	80	M 20	125	8	8	25	5	215	3x120°	0,0237	0,0327	2,2	6,3
140	70	20	88	85	260	62	80	M 20	125	8	8	25	5	215	4x90°	0,0286	0,0364	2,7	6,6
200	80	20	102	105	300	72	94	M 20	145	8	8	25	5	250	4x90°	0,0481	0,0696	3,4	9,3
250	85	20	108	115	340	77	100	M 20	160	8	10	30	6	280	4x90°	0,081	0,121	4,5	12,7
400	105	28	135	120	370	95	125	M 24	170	10	10	40	6	300	4x90°	0,155	0,212	7,5	18,9
600	125	30	170	140	470	110	155	M 27	200	15	10	60	5	380	4x90°	0,464	0,502	13,8	32,1
800	145	22	182	165	545	128	165	M 22	230	17	-	-	-	370 470	4x90° 4x90°	0,586	0,888	20,1	49,2

CENTAFLEX-A

TYPE 1–S

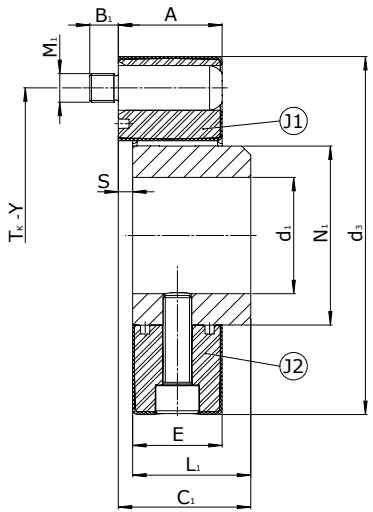

DIMENSIONS ↓ **SIZES 1–600**

Size	Dimensions												Mass moments of inertia and masses			
	A	B_1	C_1	d_{1max}	d_3	E	L_1	M_1	N_1	S	T_K	Y	J_1 [kgm²]	J_2 [kgm²]	m_1 [kg]	m_2 [kg]
1	24	7	26	19	56	22	24	M 6	30	2	44	2x180°	0,00004	0,00003	0,06	0,13
2	24	8	32	26	85	20	28	M 8	40	4	68	2x180°	0,00011	0,00016	0,10	0,26
4	28	8	34	30	100	24	30	M 8	45	4	80	3x120°	0,00023	0,00027	0,15	0,35
8	32	10	46	38	120	28	42	M 10	60	4	100	3x120°	0,0007	0,0008	0,29	0,79
12	32	10	46	38	122	28	42	M 10	60	4	100	4x90°	0,0010	0,0008	0,32	0,85
16	42	12	56	48	150	36	50	M 12	70	6	125	3x120°	0,0019	0,0021	0,50	1,26
22	42	12	56	48	150	36	50	M 12	70	6	125	4x90°	0,0026	0,0023	0,60	1,35
25	46	14	61	55	170	40	55	M 14	85	6	140	3x120°	0,0036	0,0042	0,80	1,96
28	46	14	61	55	170	40	55	M 14	85	6	140	4x90°	0,0046	0,0047	0,90	2,10
30	58	16	74	65	200	50	66	M 16	100	8	165	3x120°	0,0083	0,0100	1,3	3,4
50	58	16	74	65	200	50	66	M 16	100	8	165	4x90°	0,0106	0,0112	1,7	3,4
80	65	16	75,5	65	205	61	66	M 16	100	9,5	165	4x90°	0,0119	0,0132	1,7	3,8
90	70	20	88	85	260	62	80	M 20	125	8	215	3x120°	0,0294	0,0327	2,7	6,3
140	70	20	88	85	260	62	80	M 20	125	8	215	4x90°	0,0368	0,0364	3,4	6,6
200	80	20	102	105	300	72	94	M 20	145	8	250	4x90°	0,0596	0,0696	4,2	9,3
250	85	20	108	115	340	77	100	M 20	160	8	280	4x90°	0,091	0,121	5,0	12,7
400	105	28	135	120	370	95	125	M 24	170	10	300	4x90°	0,204	0,212	9,6	18,9
600	125	30	170	140	470	110	155	M 27	200	15	380	4x90°	0,569	0,502	16,5	32,1

CENTAFLEX-A

TYPE 2

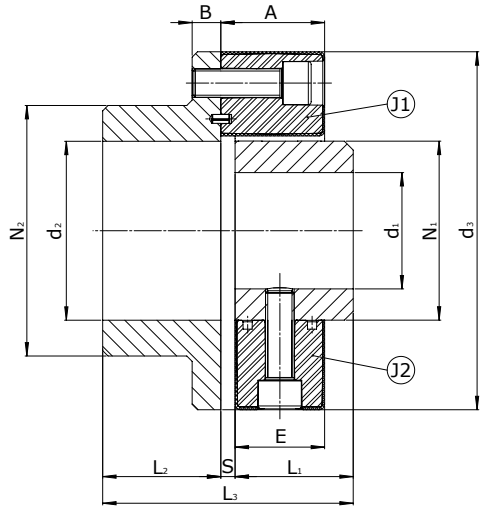

DIMENSIONS ↓ **SIZES 1–800**

Size	Dimensions												Mass moments of inertia and masses			
	A	B	d_{1max}	d_{2max}	d_3	E	L_1	L_2	L_3	N_1	N_2	S	J_1	J_2	m_1	m_2
													[kgm²]		[kg]	
1	24	7	19	25	56	22	24	24	50	30	36	2	0,00009	0,00003	0,22	0,13
2	24	8	26	38	85	20	28	28	60	40	55	4	0,00050	0,00016	0,55	0,26
4	28	8	30	45	100	24	30	30	64	45	65	4	0,00099	0,00027	0,81	0,35
8	32	10	38	55	120	28	42	42	88	60	80	4	0,0028	0,0008	1,59	0,79
12	32	10	38	55	122	28	42	42	88	60	80	4	0,0029	0,0008	1,62	0,85
16	42	12	48	70	150	36	50	50	106	70	100	6	0,0080	0,0021	2,86	1,26
22	42	12	48	70	150	36	50	50	106	70	100	6	0,0084	0,0023	2,90	1,35
25	46	14	55	85	170	40	55	55	116	85	115	6	0,0147	0,0042	3,93	1,96
28	46	14	55	85	170	40	55	55	116	85	115	6	0,0153	0,0047	4,00	2,10
30	58	16	65	100	200	50	66	66	140	100	140	8	0,0353	0,0100	6,8	3,4
50	58	16	65	100	200	50	66	66	140	100	140	8	0,0368	0,0112	7,1	3,4
80	65	16	65	100	205	61	66	66	141,5	100	140	9,5	0,0382	0,0132	7,2	3,8
90	70	19	85	110	260	62	80	80	168	125	160	8	0,1098	0,0327	13,6	6,3
140	70	19	85	110	260	62	80	80	168	125	160	8	0,1143	0,0364	14,0	6,6
200	80	19	105	110	300	72	94	90	192	145	160	8	0,1881	0,0696	18,2	9,3
250	85	19	115	130	340	77	100	100	208	160	195	8	0,341	0,121	26,5	12,7
400	105	25	120	140	370	95	125	125	260	170	200	10	0,594	0,212	37,9	18,9
600	125	28	140	180	470	110	155	155	325	200	280	15	1,810	0,502	77,5	32,1
800	145	28	165	230	545	128	165	165	347	230	325	17	2,652	0,888	95,3	49,2

CENTAFLEX-A

TYPE 2–S

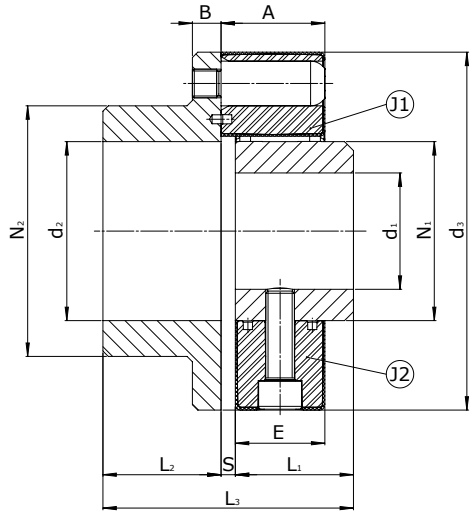

DIMENSIONS ↓ **SIZES 1–600**

Size	Dimensions												Mass moments of inertia and masses			
	A	B	d_{1max}	d_{2max}	d_3	E	L_1	L_2	L_3	N_1	N_2	S	J_1	J_2	m_1	m_2
													[kgm²]		[kg]	
1	24	7	19	25	56	22	24	24	50	30	36	2	0,00011	0,00003	0,24	0,13
2	24	8	26	38	85	20	28	28	60	40	55	4	0,00052	0,00016	0,57	0,26
4	28	8	30	45	100	24	30	30	64	45	65	4	0,00102	0,00027	0,83	0,35
8	32	10	38	55	120	28	42	42	88	60	80	4	0,0029	0,0008	1,63	0,79
12	32	10	38	55	122	28	42	42	88	60	80	4	0,0032	0,0008	1,66	0,85
16	42	12	48	70	150	36	50	50	106	70	100	6	0,0084	0,0021	2,96	1,26
22	42	12	48	70	150	36	50	50	106	70	100	6	0,0091	0,0023	3,0	1,35
25	46	14	55	85	170	40	55	55	116	85	115	6	0,0156	0,0042	4,13	1,96
28	46	14	55	85	170	40	55	55	116	85	115	6	0,0165	0,0047	4,2	2,10
30	58	16	65	100	200	50	66	66	140	100	140	8	0,0371	0,0100	7,1	3,4
50	58	16	65	100	200	50	66	66	140	100	140	8	0,0393	0,0112	7,5	3,4
80	65	16	65	100	205	61	66	66	141,5	100	140	9,5	0,0406	0,0132	7,5	3,8
90	70	19	85	110	260	62	80	80	168	125	160	8	0,1155	0,0327	14,1	6,3
140	70	19	85	110	260	62	80	80	168	125	160	8	0,1225	0,0364	14,7	6,6
200	80	19	105	110	300	72	94	90	192	145	160	8	0,1996	0,0696	19,0	9,3
250	85	19	115	130	340	77	100	100	208	160	195	8	0,350	0,121	27,0	12,7
400	105	25	120	140	370	95	125	125	260	170	200	10	0,643	0,212	40,0	18,9
600	125	28	140	180	470	110	155	155	325	200	280	15	1,914	0,502	80,2	32,1

CENTAFLEX-A

TYPE 3

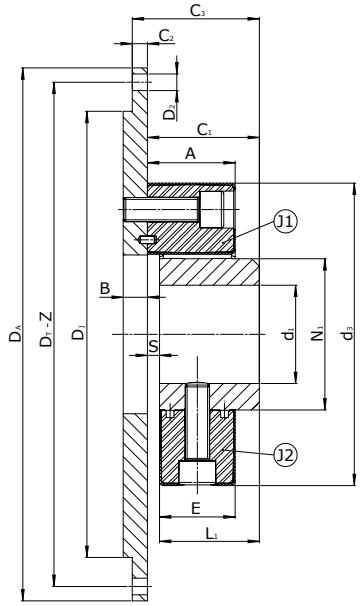

DIMENSIONS | **↓ SIZES 8–90** | ← SIZES 140-800

Size	SAE J620	A	B	C_1	C_2	C_3	d_{1max}	d_3	D_j	D_2	D_A	D_T	Z	E	L_1	N_1	S	J_1 [kgm²]	J_2 [kgm²]	m_1 [kg]	m_2 [kg]
		Dimensions																Mass moments of intertia and masses			
8	6,5	32	10	46	6	52	38	120	180	9	215,9	200	6x60°	28	42	60	4	0,0135	0,0008	2,45	0,79
	7,5				6	52			190	9	241,3	222,3	8x45°					0,0198		2,95	
12	6,5	32	10	46	6	52	38	122	180	9	215,9	200	6x60°	28	42	60	4	0,0136	0,0008	2,48	0,85
	7,5				6	52			190	9	241,3	222,3	8x45°					0,0135		2,48	
16	6,5	42	12	56	6	62	48	150	180	9	215,9	200	6x60°	36	50	70	6	0,0155	0,0021	2,9	1,26
	7,5				6	62			190	9	241,3	222,3	8x45°					0,0224		3,5	
22	6,5	42	12	56	6	62	48	150	180	9	215,9	200	6x60°	36	50	70	6	0,0157	0,0023	3,9	1,35
	7,5				6	62			190	9	241,3	222,3	8x45°					0,0228		4,5	
25	7,5	46	14	61	6	67	55	170	190	9	241,3	222,3	6x60°	40	55	85	6	0,0255	0,0042	4,5	1,96
	8				6	67			200	11	263,5	244,5	6x60°					0,0338		4,6	
	10				10	71			260	11	314,3	295,3	8x45°					0,0897			
28	7,5	46	14	61	6	67	55	170	190	9	241,3	222,3	6x60°	40	55	85	6	0,0324	0,0047	8,7	2,10
	8				6	67			200	11	263,5	244,5	6x60°					0,0345		10,7	
	10				10	71			260	11	314,3	295,3	8x45°					0,0904			
30	10	58	16	74	10	84	65	200	270	11	314,3	295,3	8x45°	50	66	100	8	0,1039	0,0100	8,9	3,40
	11,5				10	84			310	11	352,4	333,4	8x45°					0,1568		10,9	
50	10	58	16	74	10	84	65	200	270	11	314,3	295,3	8x45°	50	66	100	8	0,1054	0,0112	9,0	3,40
	11,5				10	84			310	11	352,4	333,4	8x45°					0,1583		11,0	
80	10	65	16	75,5	10	85,5	65	205	270	11	314,3	295,3	8x45°	61	66	100	9,5	0,1068	0,0132	10,2	3,80
	11,5				10	85,5			310	11	352,4	333,4	8x45°					0,1597		12,6	
90	10	70	19	88	10	98	85	260	270	11	314,3	295,3	8x45°	62	80	125	8	0,1292	0,0327	10,7	6,30
	11,5				10	98			310	11	352,4	333,4	8x45°					0,1882		13,1	

CENTAFLEX-A

TYPE 3

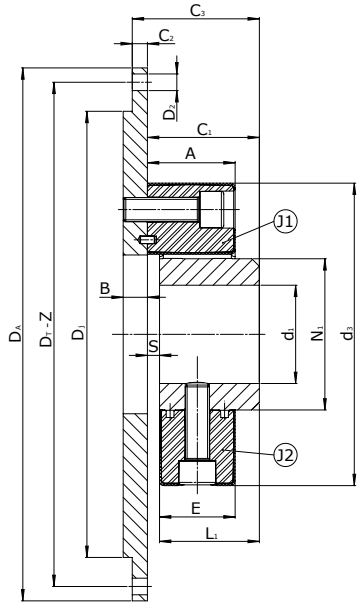

DIMENSIONS | **↓ SIZES 140–800** | ← SIZES 8–90

Size	SAE J620	Dimensions																Mass moments of inertia and masses			
		A	B	C_1	C_2	C_3	d_{1max}	d_3	D_j	D_2	D_A	D_T	Z	E	L_1	N_1	S	J_1 [kgm²]	J_2 [kgm²]	m_1 [kg]	m_2 [kg]
140	10	70	19	88	10	98	85	260	270	11	314,3	295,3	8x45°	62	80	125	8	0,1337	0,0364	10,7	6,6
	11,5				10	98			310	11	352,4	333,4	8x45°					0,1931		13,1	
	14				10	98			405	13	466,7	438,2	8x45°					0,5450			
200	11,5	80	19	102	10	112	105	300	310	11	352,4	333,4	8x45°	72	94	145	8	0,2116	0,0696	13,8	9,3
	14				10	112			405	13	466,7	438,2	8x45°					0,5639		22,4	
250	14	85	19	108	10	118	115	340	405	13	466,7	438,2	8x45°	77	100	160	8	0,533	0,121	21,3	12,7
400	14	105	25	135	10	145	120	370	405	13	466,7	438,2	8x45°	95	125	170	10	0,698	0,212	27,1	18,9
600	18	125	28	170	20	190	140	470	450	17	571,5	542,9	6x60°	110	155	200	15	2,234	0,502	56,6	32,1
	21				20	190			560	17	673,1	641,4	12x30°					4,055		77,3	
800	21	145	28	182	15	197	165	545	560	17	673,1	641,4	12x30°	128	165	230	17	3,325	0,888	66,9	49,2

CENTAFLEX-A

TYPE 3–S

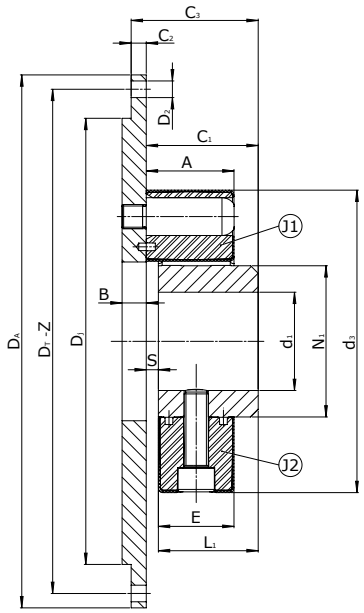

DIMENSIONS | **↓ SIZES 8–90** | ← SIZES 140-600

Size	SAE J620	A	B	C_1	C_2	C_3	d_{1max}	d_3	D_J	D_2	D_A	D_T	Z	E	L_1	N_1	S	J_1 [kgm²]	J_2 [kgm²]	m_1 [kg]	m_2 [kg]
		Dimensions																Mass moments of inertia and masses			
8	6,5 7,5	32	10	46	6 6	52 52	38	120	180 190	9 9	215,9 241,3	200 222,3	6x60° 8x45°	28	42	60	4	0,0136 0,0199	0,0008	2,49 2,49	0,79
12	6,5 7,5	32	10	46	6 6	52 52	38	122	180 190	9 9	215,9 241,3	200 222,3	6x60° 8x45°	28	42	60	4	0,0139 0,0138	0,0008	2,52 2,52	0,85
16	6,5 7,5	42	12	56	6 6	62 62	48	150	180 190	9 9	215,9 241,3	200 222,3	6x60° 8x45°	36	50	70	6	0,0159 0,0228	0,0021	3,0 3,5	1,26
22	6,5 7,5	42	12	56	6 6	62 62	48	150	180 190	9 9	215,9 241,3	200 222,3	6x60° 8x45°	36	50	70	6	0,0164 0,0235	0,0023	3,0 3,5	1,35
25	7,5 8 10	46	14	61	6 6 10	67 67 71	55	170	190 200 260	9 11 11	241,3 263,5 314,3	222,3 244,5 295,3	6x60° 6x60° 8x45°	40	55	85	6	0,0264 0,0347 0,0906	0,0042	4,1 4,7	1,96
28	7,5 8 10	46	14	61	6 6 10	67 67 71	55	170	190 200 260	9 11 11	241,3 263,5 314,3	222,3 244,5 295,3	6x60° 6x60° 8x45°	40	55	85	6	0,0336 0,0357 0,0916	0,0047	4,7 4,8	2,10
30	10 11,5	58	16	74	10 10	84 84	65	200	270 310	11 11	314,3 352,4	295,3 333,4	8x45° 8x45°	50	66	100	8	0,1057 0,1586	0,0100	9,0 11,0	3,40
50	10 11,5	58	16	74	10 10	84 84	65	200	270 310	11 11	314,3 352,4	295,3 333,4	8x45° 8x45°	50	66	100	8	0,1079 0,1608	0,0112	9,3 11,3	3,40
80	10 11,5	65	16	75,5	10 10	85,5 85,5	65	205	270 310	11 11	314,3 352,4	295,3 333,4	8x45° 8x45°	61	66	100	9,5	0,1092 0,1621	0,0132	9,3 11,3	3,80
90	10 11,5	70	19	88	10 10	98 98	85	260	270 310	11 11	314,3 352,4	295,3 333,4	8x45° 8x45°	62	80	125	8	0,1349 0,1939	0,0327	10,7 13,1	6,30

CENTAFLEX-A

TYPE 3–S

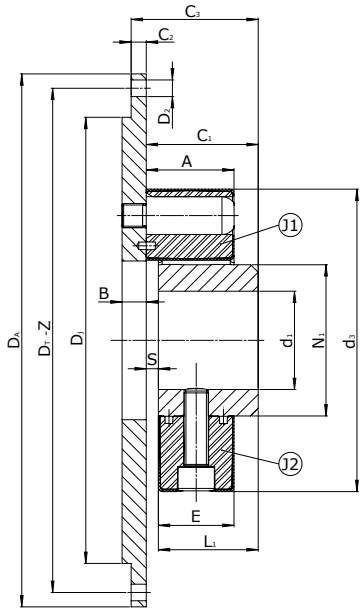

DIMENSIONS | **↓ SIZES 140–600** | ← SIZES 8-90

Size	SAE J620	Dimensions A	B	C_1	C_2	C_3	d_{1max}	d_3	D_J	D_2	D_A	D_T	Z	E	L_1	N_1	S	Mass moments of inertia and masses J_1 [kgm^2]	J_2	m_1 [kg]	m_2
140	10	70	19	88	10	98	85	260	270	11	314,3	295,3	8x45°	62	80	125	8	0,1419	0,0364	11,4	6,6
	11,5				10	98			310	11	352,4	333,4	8x45°					0,2013		13,8	
	14				10	98			405	13	466,7	438,2	8x45°					0,5532			
200	11,5	80	19	102	10	112	105	300	310	11	352,4	333,4	8x45°	72	94	145	8	0,2231	0,0696	14,6	9,3
	14				10	112			405	13	466,7	438,2	8x45°					0,5754		23,9	
250	14	85	19	108	10	118	115	340	405	13	466,7	438,2	8x45°	77	100	160	8	0,543	0,121	21,8	12,7
400	14	105	25	135	10	145	120	370	405	13	466,7	438,2	8x45°	95	125	170	10	0,747	0,212	29,2	18,9
600	18	125	28	170	20	190	140	470	450	17	571,5	542,9	6x60°	110	155	200	15	2,339	0,502	59,3	32,1
	21				20	190			560	17	673,1	641,4	12x30°					4,160		80,0	

CENTAFLEX-A
TYPE G

DRIVE SHAFTS

Type G Sizes 1–800 ..... Page 28

DIMENSIONS

Type G Sizes 1–600 ..... Page 29

Type GB–GZ Sizes 1–800 ..... Page 30

CENTAFLEX-A
DRIVE SHAFTS

CENTAFLEX-A drive shafts in various lengths, adaptable to the installation requirements if applied as homokinetic shaft. Also available as carbon-fibre or glass-fibre designs and with split element. Easy handling and mountable with minimum effort. Dampens torsional vibrations and shocks and compensates considerable axial, radial and angular misalignments.

TYPE G
The simplest design type; the centre part is centered only by the elements. Suitable for short and medium lengths and for speeds up to approx. 1500 min^{-1}.

TYPE GB/GZ
Accurate, low maintenance centering of the central part for applications with very high speeds and/or long shaft length.

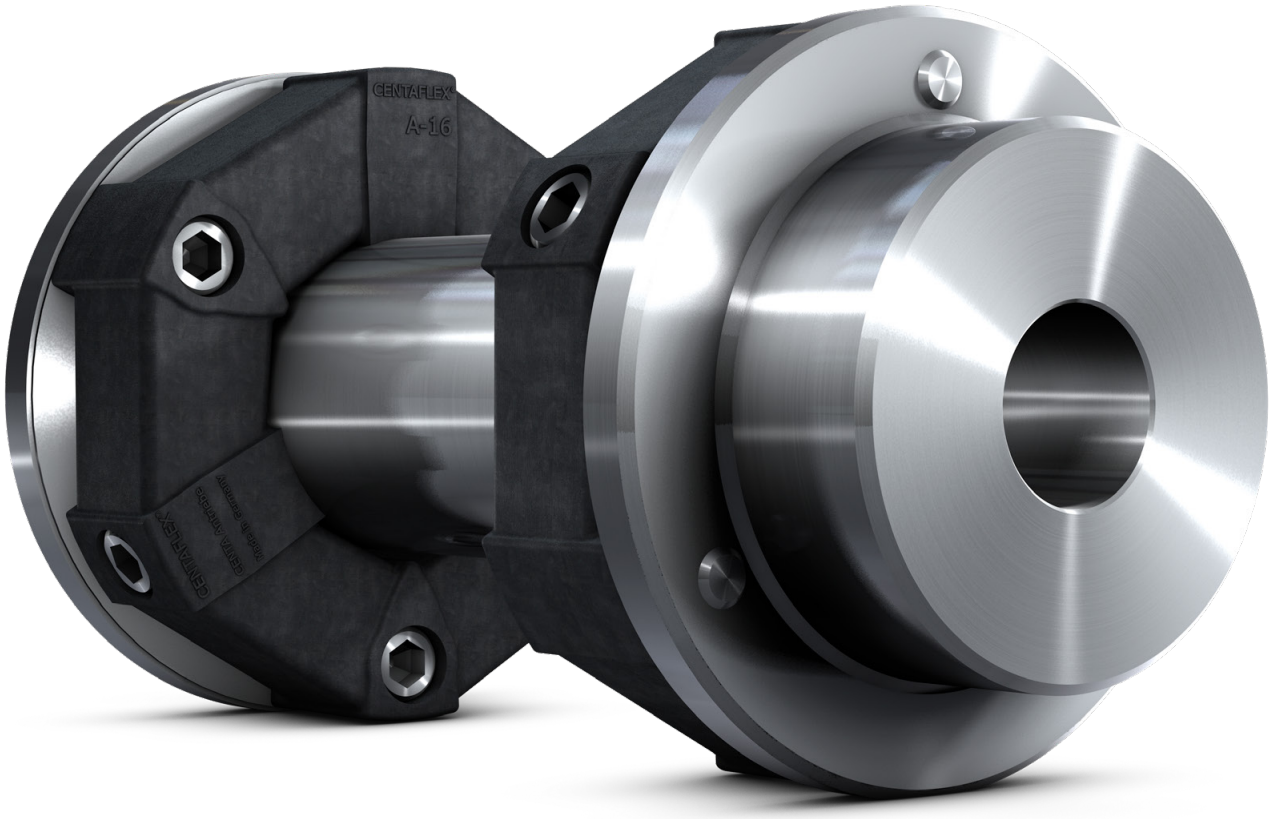

CENTAFLEX-A

TYPE G

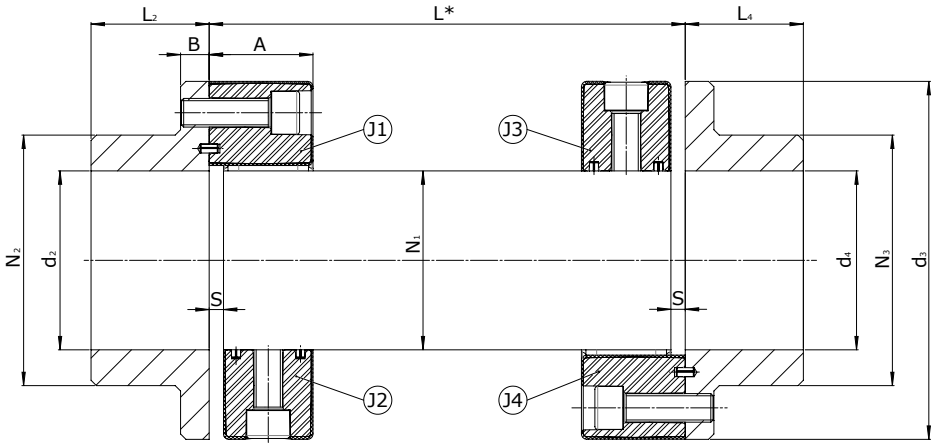

DIMENSIONS | **↓ SIZES 1–600**

Size	Dimensions											
	A	B	d_{2max}	d_3	d_{4max}	L	L_2	L_4	N_1	N_2	N_3	S
1	24	7	25	56	25	*	24	24	30	36	36	2
2	24	8	38	85	38	*	28	28	40	55	55	4
4	28	8	45	100	45	*	30	30	45	65	65	4
8	32	10	55	120	55	*	42	42	60	80	80	4
12	32	10	55	122	55	*	42	42	60	80	80	4
16	42	12	70	150	70	*	50	50	70	100	100	6
22	42	12	70	150	70	*	50	50	70	100	100	6
25	46	14	85	170	85	*	55	55	85	115	115	6
28	46	14	85	170	85	*	55	55	85	115	115	6
30	58	16	100	200	100	*	66	66	100	140	140	8
50	58	16	100	200	100	*	66	66	100	140	140	8
80	65	16	100	205	100	*	66	66	100	140	140	9,5
90	70	19	110	260	110	*	80	80	125	160	160	8
140	70	19	110	260	110	*	80	80	125	160	160	8
200	80	19	110	300	110	*	90	90	145	160	160	8
250	85	19	130	340	130	*	100	100	160	195	195	8
400	105	25	140	370	140	*	125	125	170	200	200	10
600	125	28	180	470	180	*	155	155	200	280	280	15

* acc. customer specification
Mass moments of inertia and masses on request

CENTAFLEX-A

TYPE GB/GZ

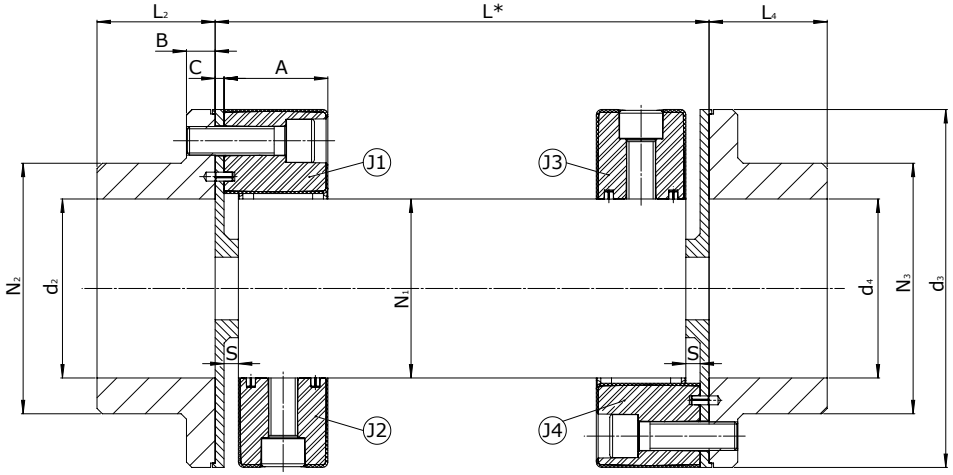

Type GZ

DIMENSIONS | **↓ SIZES 1–800**

Size	Dimensions												
	A	B	C	d_{2max}	d_3	d_{4max}	L	L_2	L_4	N_1	N_2	N_3	S
1	24	7	5	25	56	25	*	24	24	30	36	36	2
2	24	8	5	38	85	38	*	28	28	40	55	55	4
4	28	8	5	45	100	45	*	30	30	45	65	65	4
8	32	10	5	55	120	55	*	42	42	60	80	80	4
12	32	10	5	55	122	55	*	42	42	60	80	80	4
16	42	12	5	70	150	70	*	50	50	70	100	100	6
22	42	12	5	70	150	70	*	50	50	70	100	100	6
25	46	14	5	85	170	85	*	55	55	85	115	115	6
28	46	14	5	85	170	85	*	55	55	85	115	115	6
30	58	16	5	100	200	100	*	66	66	100	140	140	8
50	58	16	5	100	200	100	*	66	66	100	140	140	8
80	65	16	5	100	205	100	*	66	66	100	140	140	9,5
90	70	19	5	110	260	110	*	80	80	125	160	160	8
140	70	19	5	110	260	110	*	80	80	125	160	160	8
200	80	19	10	110	300	110	*	90	90	145	160	160	8
250	85	19	10	130	340	130	*	100	100	160	195	195	8
400	105	25	10	140	370	140	*	125	125	170	200	200	10
600	125	28	10	180	470	180	*	155	155	200	280	280	15
800	145	28	10	230	545	230	*	165	165	230	325	325	17

* acc. customer specification
Mass moments of inertia and masses on request

EXPLANATION OF THE TECHNICAL DATA

This appendix shows all explanations of the technical data for all CENTA products.

the green marked explanations are relevant for this catalog:

1	Size	Page APP-2
2	Rubber quality	Page APP-2
3	Nominal torque	Page APP-2
4	Maximum torque	Page APP-2
5	Continuous vibratory torque	Page APP-2
6	Permissible power loss	Page APP-2
7	Dynamic torsional stiffness	Page APP-3
8	Relative damping	Page APP-3
9	Speed	Page APP-3
10	Permissible axial displacement	Page APP-3
11	Axial stiffness	Page APP-4
12	Permissible radial displacement	Page APP-4
13	Radial stiffness	Page APP-4
14	Permissible angular displacement	Page APP-4
15	Angular stiffness	Page APP-4

Are these technical explanations up to date?
click here for an update check!

CENTAFLEX-A

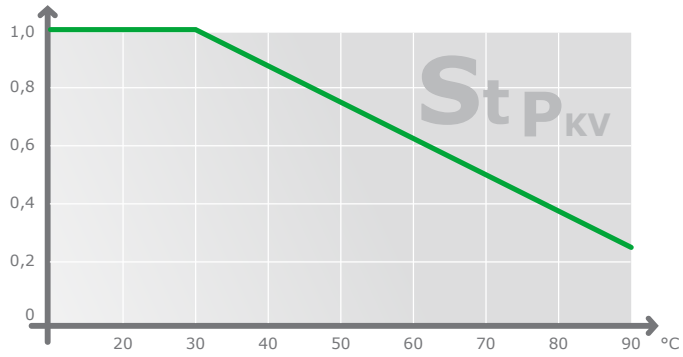

EXPLANATION OF THE TECHNICAL DATA

1

Size

This spontaneously selected figure designates the size of the coupling.

2

Rubber quality

Shore A

This figure indicates the nominal shore hardness of the elastic element.

The nominal value and the effective value may deviate within given tolerance ranges.

3

Nominal torque

T_{KN} [kNm]

Average torque which can be transmitted continuously over the entire speed range.

4

Maximum torque

[kNm]

T_{Kmax}	This is the torque that may occur occasionally and for a short period up to 1.000 times and may not lead to a substantial temperature rise in the rubber element.

In addition the following maximum torques may occur:

$\Delta T_{Kmax} = 1{,}8 \times T_{KN}$	Peak torque range (peak to peak) between maximum and minimum torque, e.g. switching operation.
$T_{Kmax1} = 1{,}5 \times T_{KN}$	Temporary peak torque (e.g. passing through resonances). ΔT_{Kmax} or T_{Kmax1} may occur 50.000 times alternating or 100.000 times swelling.
$T_{Kmax2} = 4{,}5 \times T_{KN}$	Transient torque rating for very rare, extraordinary conditions (e.g. short circuits).

5

Continuous vibratory torque

T_{KW} [kNm]

Amplitude of the continuously permissible periodic torque fluctuation with a basic load up to the value T_{KN}.

The frequency of the amplitude has no influence on the permissible continuous vibratory torque. Its main influence on the coupling temperature is taken into consideration in the calculation of the power loss.

Operating torque

T_{Bmax} [kNm]

The maximum operating torque results of T_{KN} and T_{KW}.

6

Permissible Power Loss

P_{KV} [kW] or [W]

Damping of vibrations and displacement results in power loss within the rubber element.

The permissible power loss is the maximum heat (converted damping work into heat), which the rubber element can dissipate continuously to the environment (i.e. without time limit) without the maximum permissible temperature being exceeded.

The given permissible power loss refers to an ambient temperature of 30° C.

If the coupling is to be operated at a higher ambient temperature, the temperature factor S_{tPKV} has to be taken into consideration in the calculation.

The coupling can momentarily withstand an increase of the permissible power loss for a short period under certain operation modes (e.g. misfiring).

P_{KVZ} [kW]

Defines an individual and proven guide for power loss under misfiring. This value acknowledges general information of the engine suppliers, in particular the real appearance of misfiring and implemented control and protection devices. Values on request.

CENTAFLEX-A

EXPLANATION OF THE TECHNICAL DATA

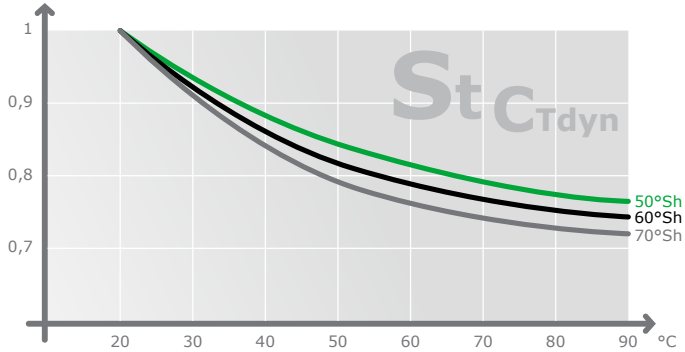

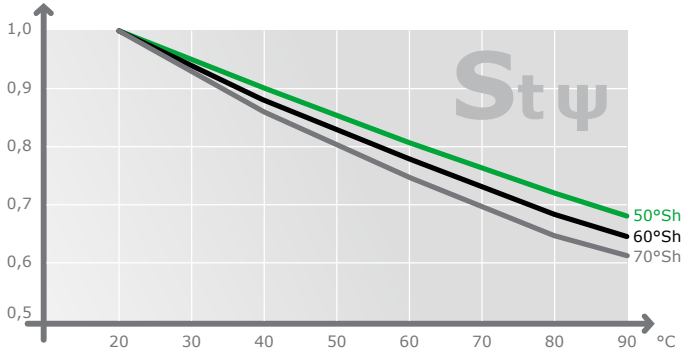

7

Dynamic torsional stiffness

C_{Tdyn} [kNm/rad]

The dynamic torsional stiffness is the relation of the torque to the torsional angle under dynamic loading.

The torsional stiffness may be linear or progressive depending on the coupling design and material.

The value given for couplings with linear torsional stiffness considers following terms:

- Pre-load: 50% of T_{KN}
- Amplitude of vibratory torque: 25% of T_{KN}
- Ambient temperature: 20°C
- Frequency: 10 Hz

For couplings with progressive torsional stiffness only the pre-load value changes as stated.

The tolerance of the torsional stiffness is ±15% if not stated otherwise.

The following influences need to be considered if the torsional stiffness is required for other operating modes:

- Temperature
  Higher temperature reduces the dynamic torsional stiffness.
  Temperature factor $S_{t\,C_{Tdyn}}$ has to be taken into consideration in the calculation.
- Frequency of vibration
  Higher frequencies increase the torsional stiffness.
  By experience the dynamic torsional stiffness is 30% higher than the static stiffness. CENTA keeps record of exact parameters.
- Amplitude of vibratory torque
  Higher amplitudes reduce the torsional stiffness, therefore small amplitudes result in higher dynamic stiffness. CENTA keeps record of exact parameters.

8

Relative damping

ψ

The relative damping is the relationship of the damping work to the elastic deformation during a cycle of vibration.

The larger this value [ψ], the lower is the increase of the continuous vibratory torque within or close to resonance.

The tolerance of the relative damping is ±20%, if not otherwise stated.

The relative damping is reduced at higher temperatures.

Temperature factor $S_{t\psi}$ has to be taken into consideration in the calculation.

The vibration amplitude and frequency only have marginal effect on the relative damping.

9

Speed

[min^{-1}]

n_{max}	The maximum speed of the coupling element, which may occur occasionally and for a short period (e.g. overspeed). The characteristics of mounted parts may require a reduction of the maximum speed (e.g. outer diameter or material of brake discs).
n_d	The maximum permissible speed of highly flexible coupling elements is normally 90% thereof.

10

Permissible axial displacement

[mm]

ΔK_a	The continuous permissible axial displacement of the coupling. This is the sum of displacement by assembly as well as static and dynamic displacements during operation.
$\Delta K_{a\,max}$	The maximum axial displacement of the coupling, which may occur occasionally for a short period (e.g. extreme load). The concurrent occurrence of different kinds of displacements is handled in technical documents (displacement diagrams, data sheets, assembly instructions).

CENTAFLEX-A

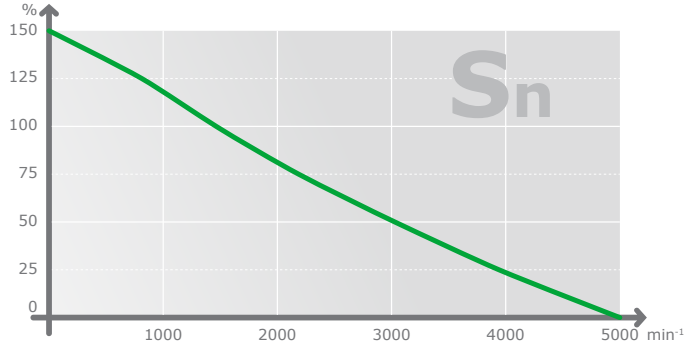

EXPLANATION OF THE TECHNICAL DATA

11	
Axial stiffness [kN/mm]	
C_a	The axial stiffness determines the axial reaction force on the input and output sides upon axial displacement.
$C_{a\ dyn}$	By experience the dynamic stiffness is higher than the static one. The factor depends on the coupling series.

12	
Permissible radial displacement [mm]	
ΔK_r	The continuous permissible radial displacement of the coupling. This is the sum of displacement by assembly as well as static and dynamic displacements during operation. The continuous permissible radial displacement depends on the operation speed and may require adjustment (see diagrams S_n of the coupling series).
$\Delta K_{r\ max}$	The maximum radial displacement of the coupling, which may occur occasionally and for a short period without consideration of the operation speed (e.g. extreme overload). The concurrent occurrence of different kinds of displacements is handled in technical documents (displacement diagrams, data sheets, assembly instructions).

13	
Radial stiffness [kN/mm]	
C_r	The radial stiffness determines the radial reaction force on the input and output sides upon radial displacement.
C_{rdyn}	By experience the dynamic stiffness is higher than the static one. The factor depends on the coupling series.

14	
Permissible angular displacement [∡°]	
ΔK_w	The continuous permissible angular displacement of the coupling. This is the sum of displacement by assembly as well as static and dynamic displacements during operation. The continuous permissible angular displacement depends on the operation speed and may require adjustment (see diagrams S_n of the coupling series).
$\Delta K_{w\ max}$	The maximum angular displacement of the coupling, which may occur occasionally and for a short period without consideration of the operation speed (e.g. extreme overload). The concurrent occurrence of different kinds of displacements is handled in technical documents (displacement diagrams, data sheets, assembly instructions).

15	
Angular stiffness [kNm/°]	
C_w	The angular stiffness determines the restoring bending moment on the input and output sides upon angular displacement.
C_{wdyn}	By experience the dynamic stiffness is higher than the static one. The factor depends on the coupling series.

CENTAFLEX-A
© 2015 by CENTA Antriebe Kirschey GmbH
Rev. CF-A-EN-17-15

1. This catalog supersedes previous editions.

   This catalog shows the extent of our coupling range at the time of printing. This program is still being extended with further sizes and series. Any changes due to technological progress are reserved.

   We reserve the right to amend any dimensions or detail specified or illustrated in this publication without notice and without incurring any obligation to provide such modification to such couplings previously delivered. Please ask for an application drawing and current data before making a detailed coupling selection.

2. We would like to draw your attention to the need of preventing accidents or injury. No safety guards are included in our supply.

3. TRADEMARKS

   CENTA, the CENTA logo, Centacone, CENTADISC, CENTAFIT, Centaflex, CENTALINK, Centalock, Centaloc, Centamax, Centastart, CENTAX and HYFLEX are registered trademarks of CENTA Antriebe Kirschey GmbH in Germany and other countries.

   Other product and company names mentioned herein may be trademarks of their respective companies.

4. Torsional responsibility

   The responsibility for ensuring the torsional vibration compatibility of the complete drive train, rests with the final assembler. As a component supplier CENTA is not responsible for such calculations, and cannot accept any liability for gear noise/-damage or coupling damage caused by torsional vibrations.

   CENTA recommends that a torsional vibration analysis (TVA) is carried out on the complete drive train prior to start up of the machinery. In general torsional vibration analysis can be undertaken by engine manufacturers, consultants or classicfication societies. CENTA can assist with such calculations using broad experience in coupling applications and torsional vibration analysis.

5. Copyright to this technical dokument is held by CENTA Antriebe Kirschey GmbH.

6. The dimensions on the flywheel side of the couplings are based on the specifications given by the purchaser. The responsibility for ensuring dimensional compatibility rests with the assembler of the drive train. CENTA cannot accept liability for interference between the coupling and the flywheel or gearbox or for damage caused by such interference.

7. All technical data in this catalog are according to the metric SI system. All dimensions are in mm. All hub dimensions (N, N_1 and N_2) may vary, depending on the required finished bore. All dimensions for masses (m), inertias (J) and centres of gravity (S) refer to the maximum bore diameter.

CENTA Power Transmission is now part of Rexnord. As a global leader in premium couplings, Rexnord provides the same high quality customer solutions and service you‘ve come to expect from CENTA since 1970.

WWW.CENTA.INFO/CONTACT

WWW.REXNORD.COM

CENTA
HEAD OFFICE

CENTA Antriebe
Kirschey GmbH

Bergische Strasse 7
42781 Haan/Germany

+49-2129-912-0 Phone
+49-2129-2790 Fax

info@centa.de

REXNORD POWER TRANSMISSION
HEAD OFFICE

4701 W Greenfield Ave
Milwaukee, WI 53214
USA

+1-414-643-3000 Phone